223 Counter & Workstation Shelf Wrap

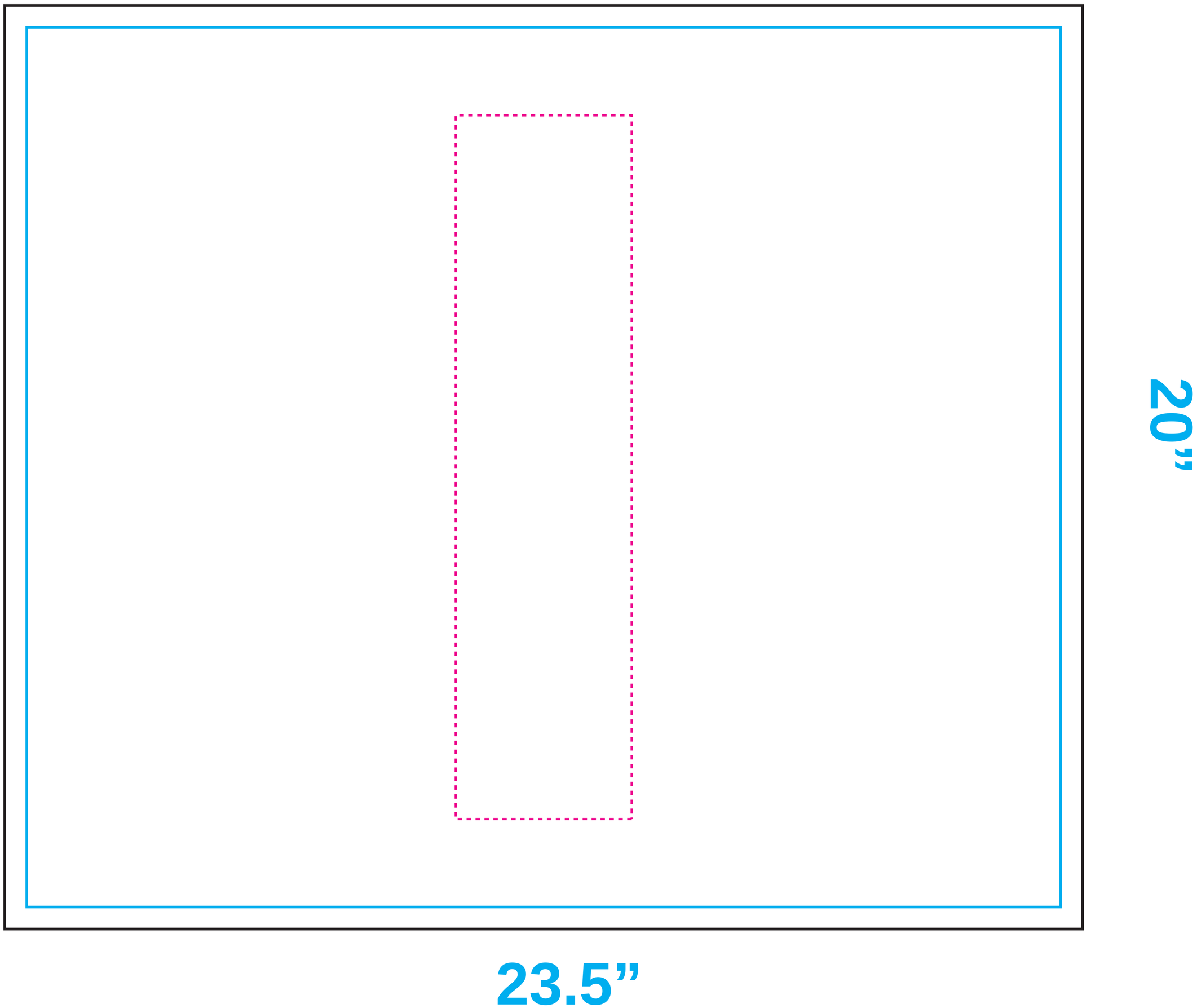

Print Size: 24.5”w x 21”h
Final Size: 23.5”w x 20”h
Live Area: 4”w x 16”h (centered)

223 Counter & Workstation

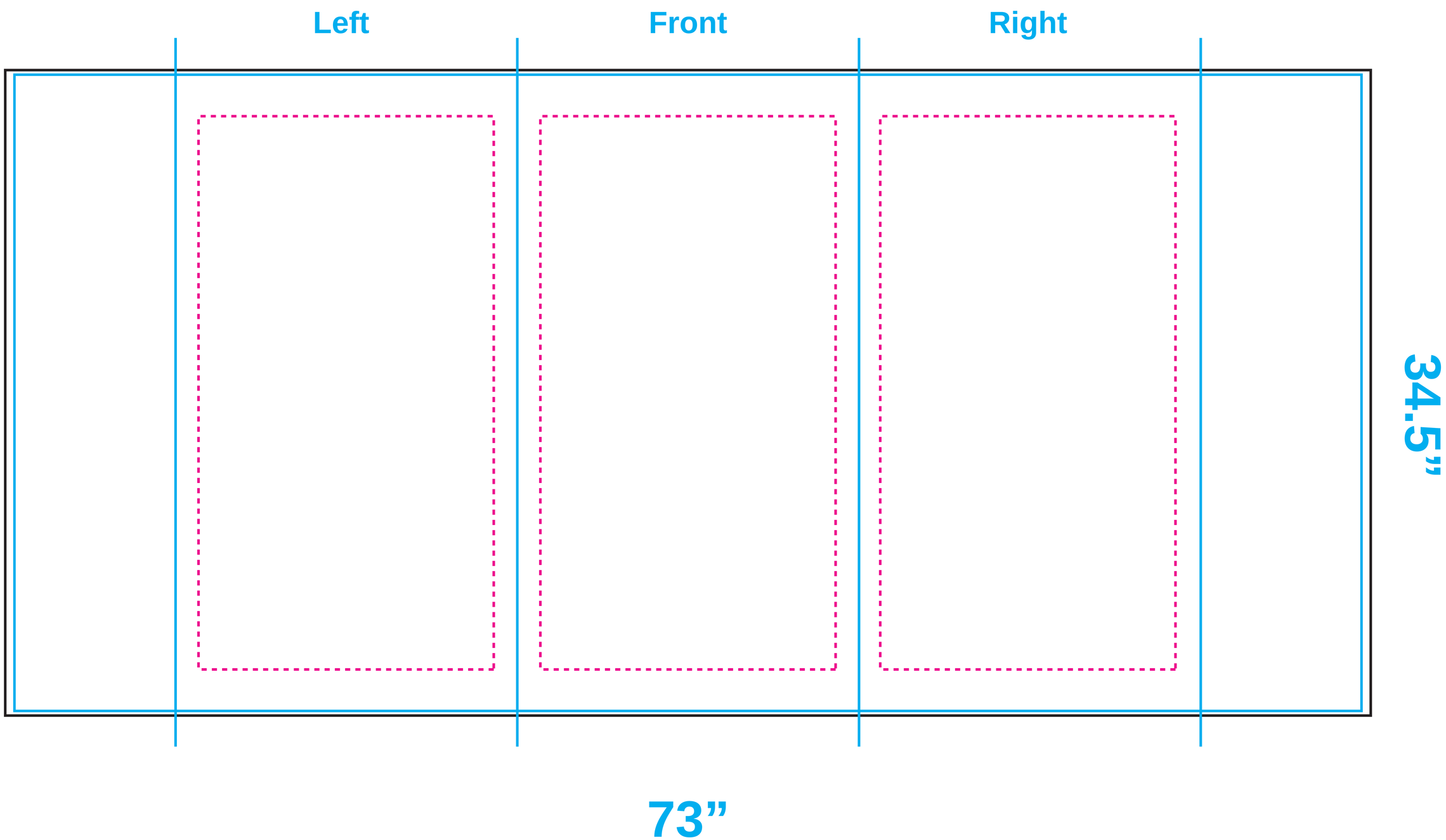

Print Size: 74”w x 35”h
Final Size: 73”w x 34.5”h
Live Area: 16”w x 30”h
Note: Graphic is sewn together in back