2x3 Straight V-Burst With Endcaps

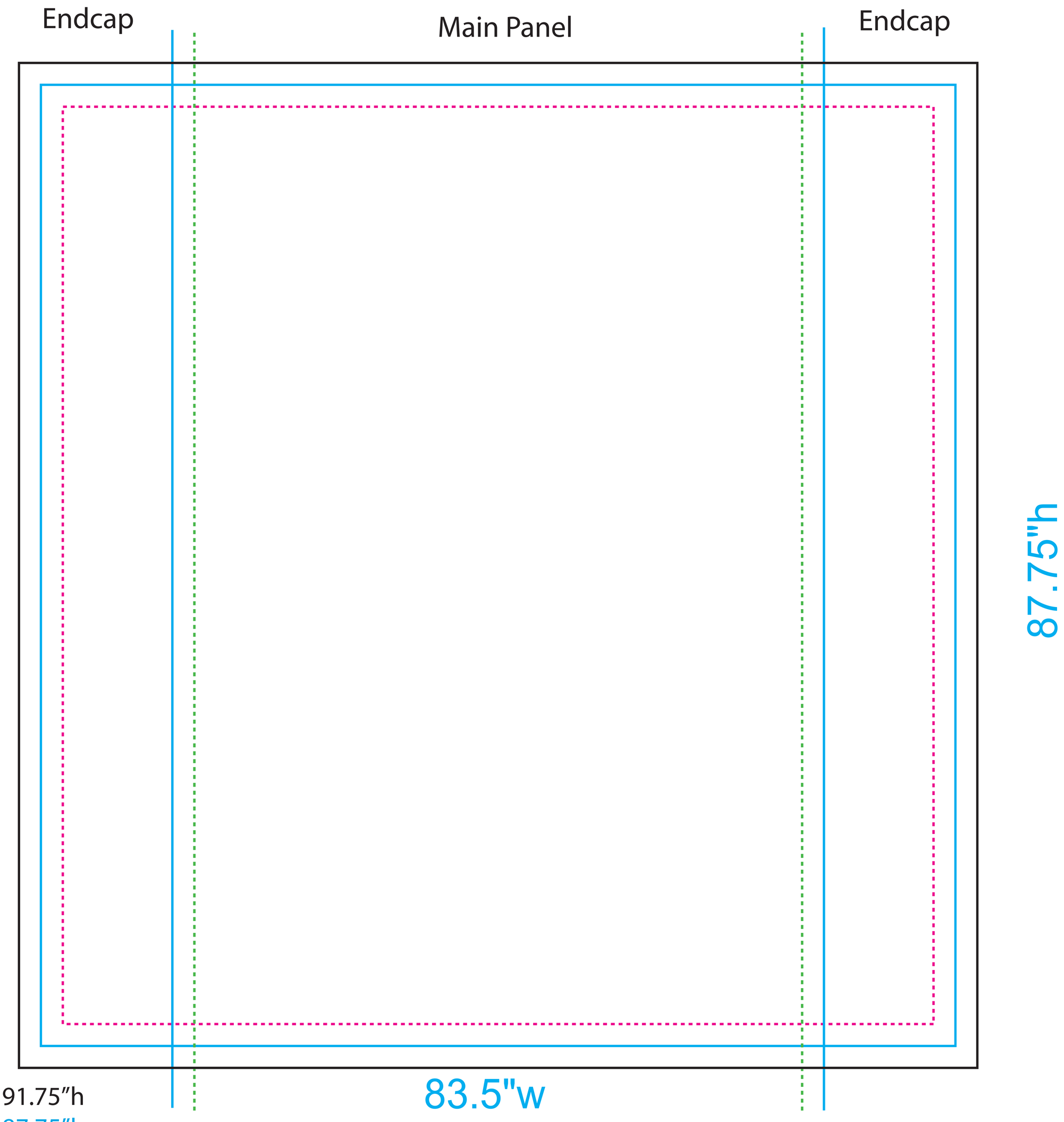

Print Size: 87.5"w x 91.75"h
Final Size: 83.5"w x 87.75"h
Endcap width: 12"
Stitching area: 79.5"w x 83.75"h
Live Area: 2" in from left and right edge of graphic

Please make sure text and images are at least 1" away from stitching and panel break.

3x3 Curved V-Burst With Endcaps

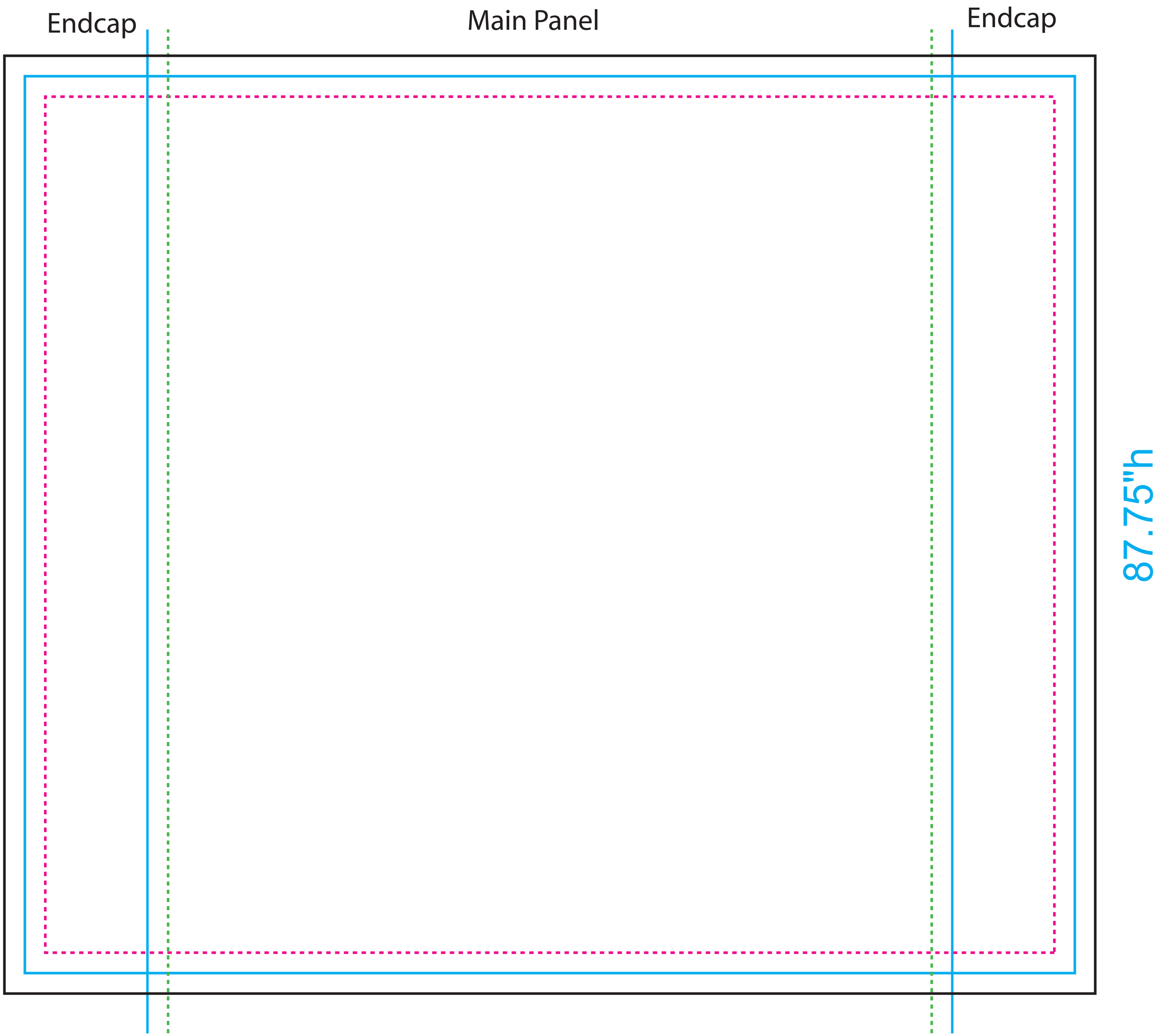

Print Size: 106.75”w x 91.75”h
Final Size: 102.75”w x 87.75”h
Endcap Width: 12”
Stitching area: 98.75”w x 83.75”h
Live Area: 2” in from left and right edge of graphic

Please make sure text and images are at least 1”
away from stitching and panel break.

VBurst DSI Case Cover Top - Form Fitted

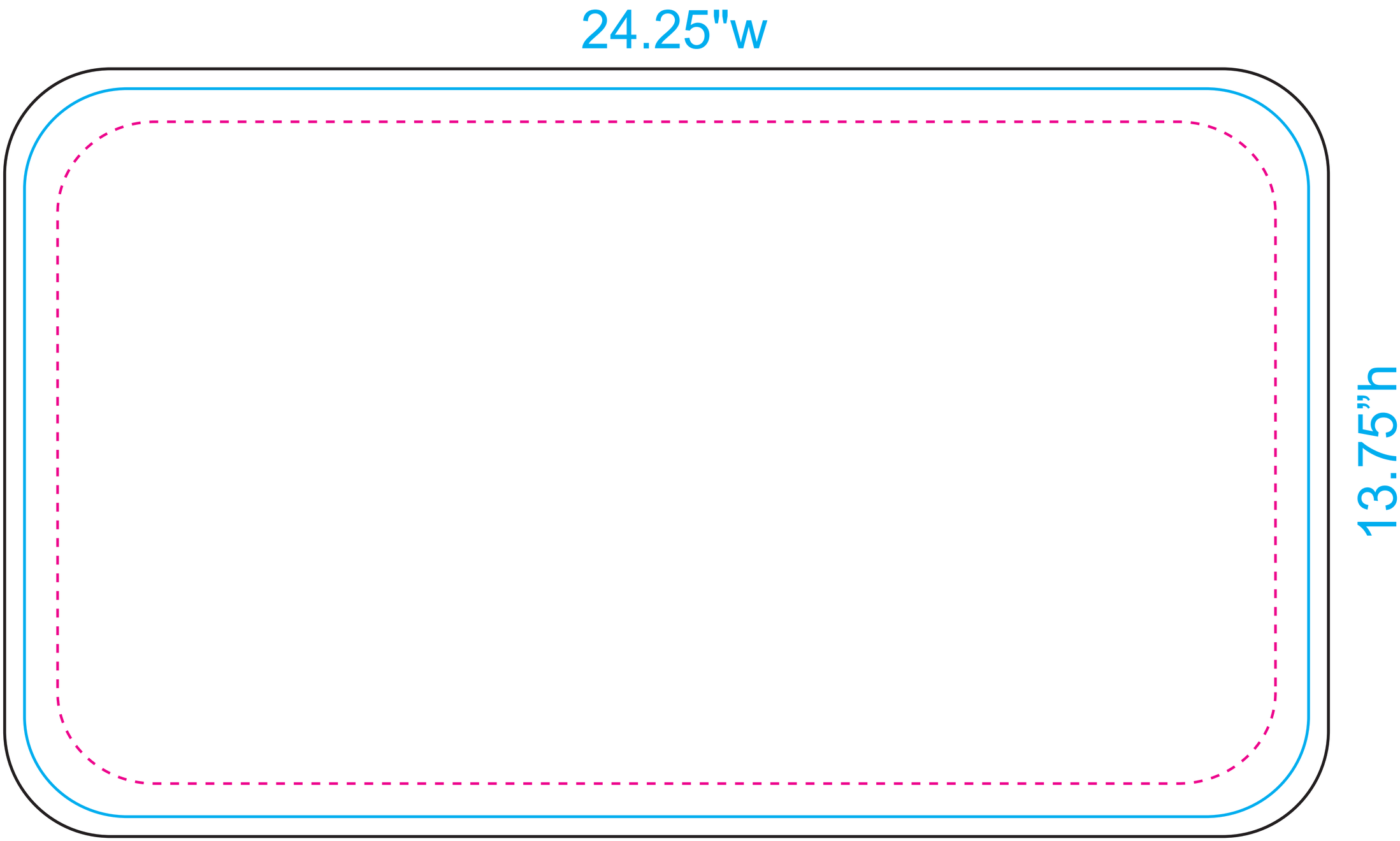

Print Size: 25”w x 14.5”h
Final Size: 24.25”w x 13.75”h
Live Area: 23”w x 12.5”h

Form Fitted VBurst DSI Case
Cover Logo on Front and Back

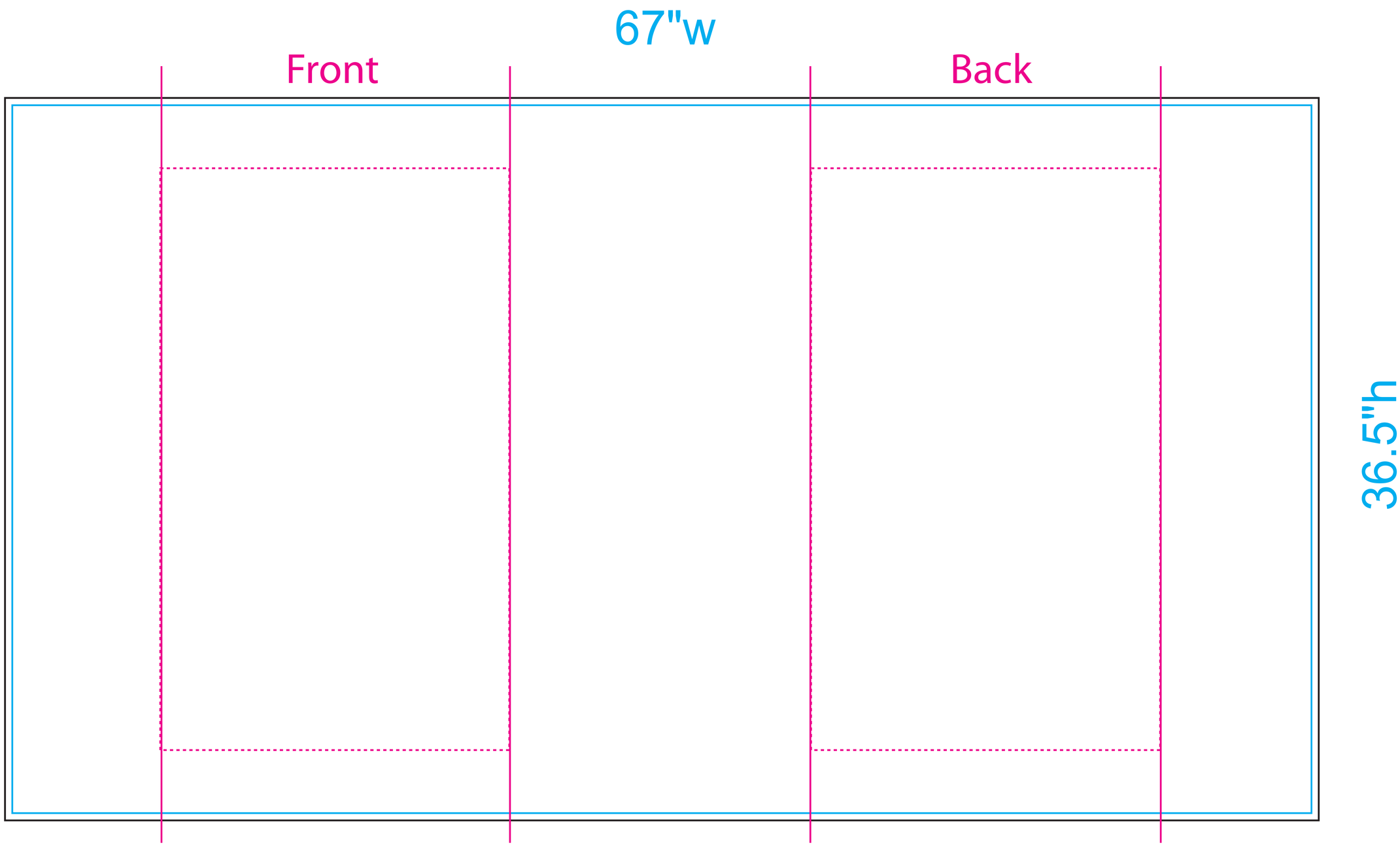

Print Size: 67.75”w x 37.25”h
Final Size: 67”w x 36.5”h
Live Area: 18”w x 30”h (centered)

Form Fitted VBurst DSI Case Cover
Logo on Front ONLY

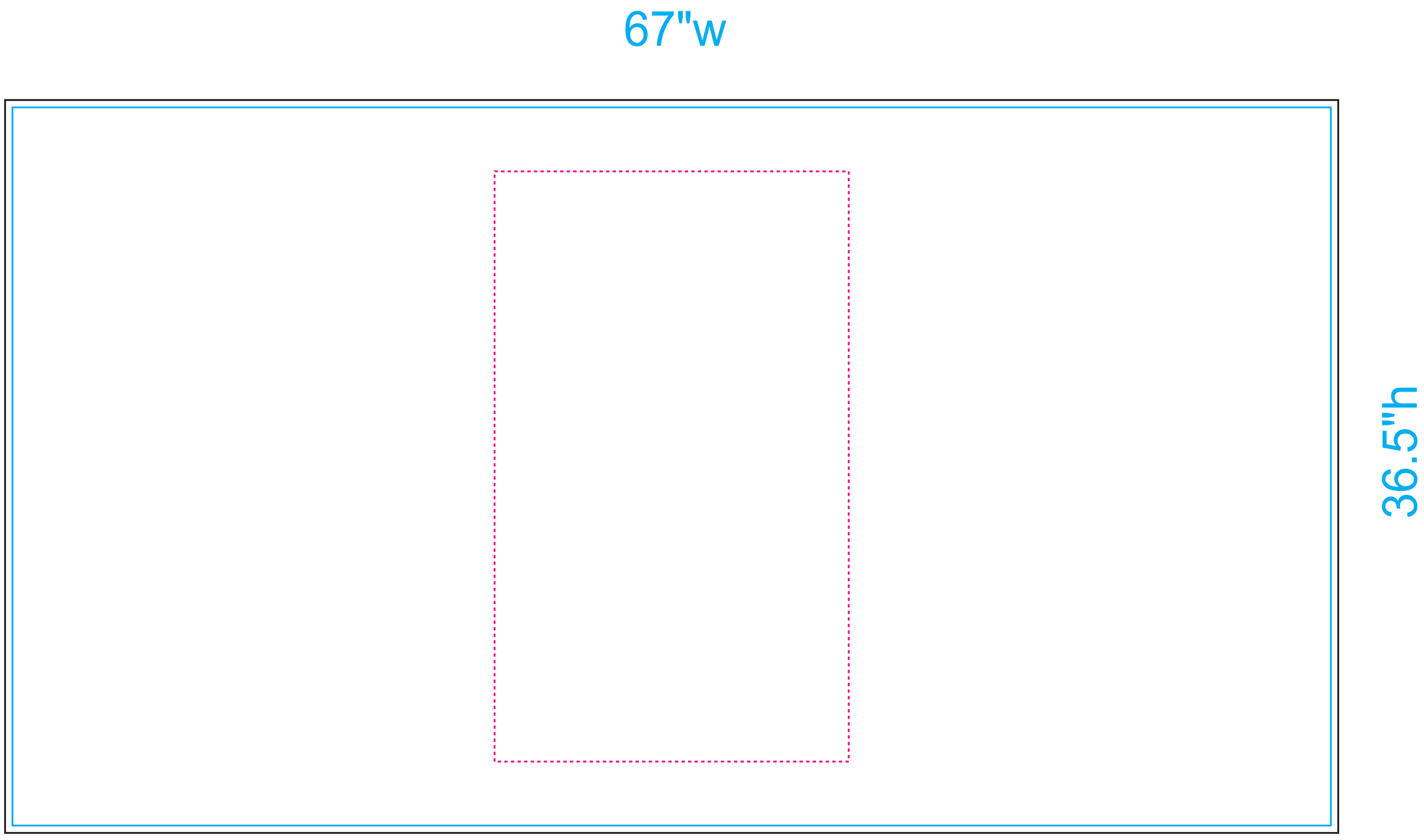

Print Size: 67.75”w x 37.25”h
Final Size: 67”w x 36.5”h
Live Area: 18”w x 30”h (centered)

VBurst DSI Case Cover Top - Draped

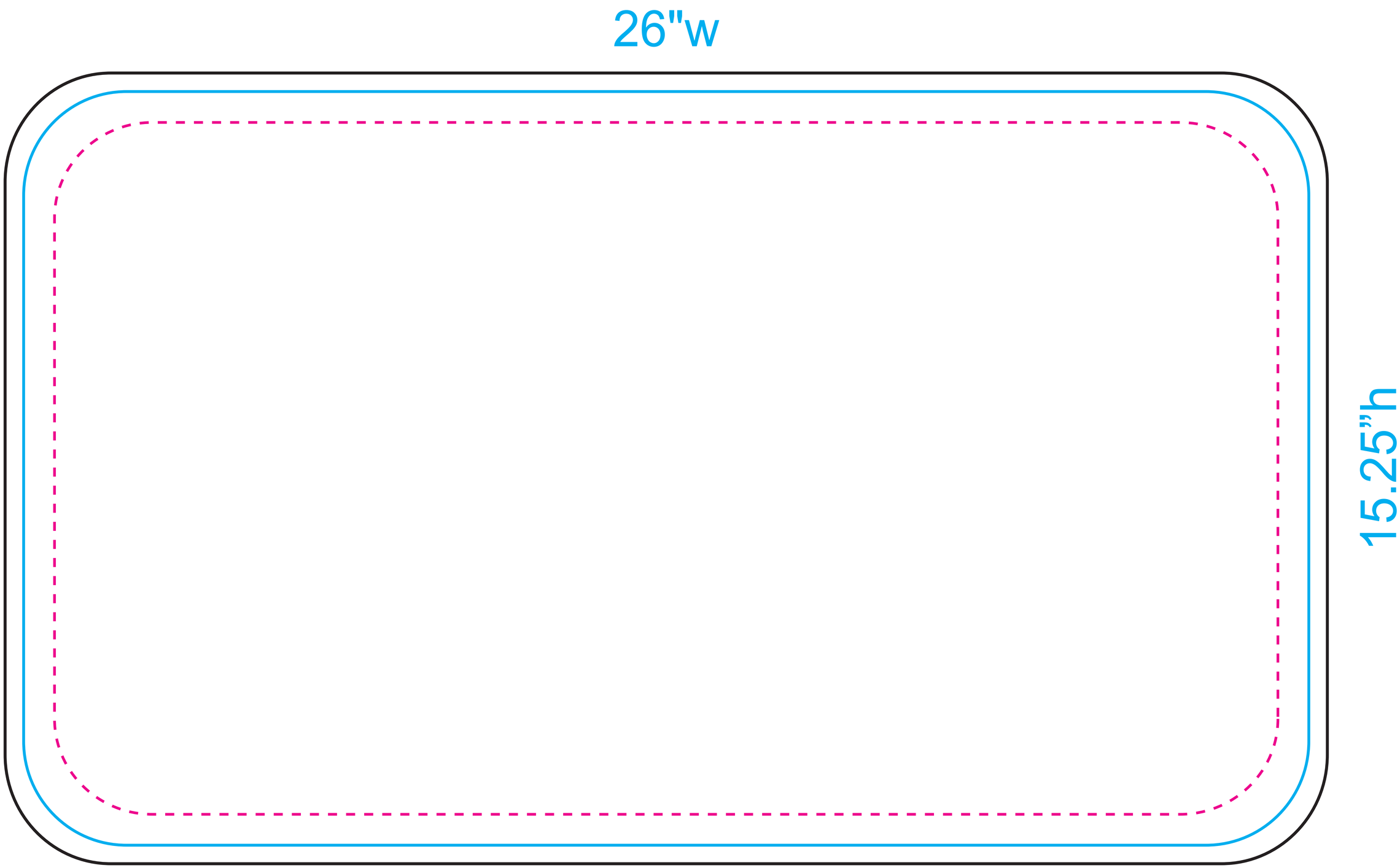

Print Size: 26.75"w x 16"h
Final Size: 26"w x 15.25"h
Live Area: 24.75"w x 14"h

Draped VBurst DSI Case Cover
Logo on Front and Back

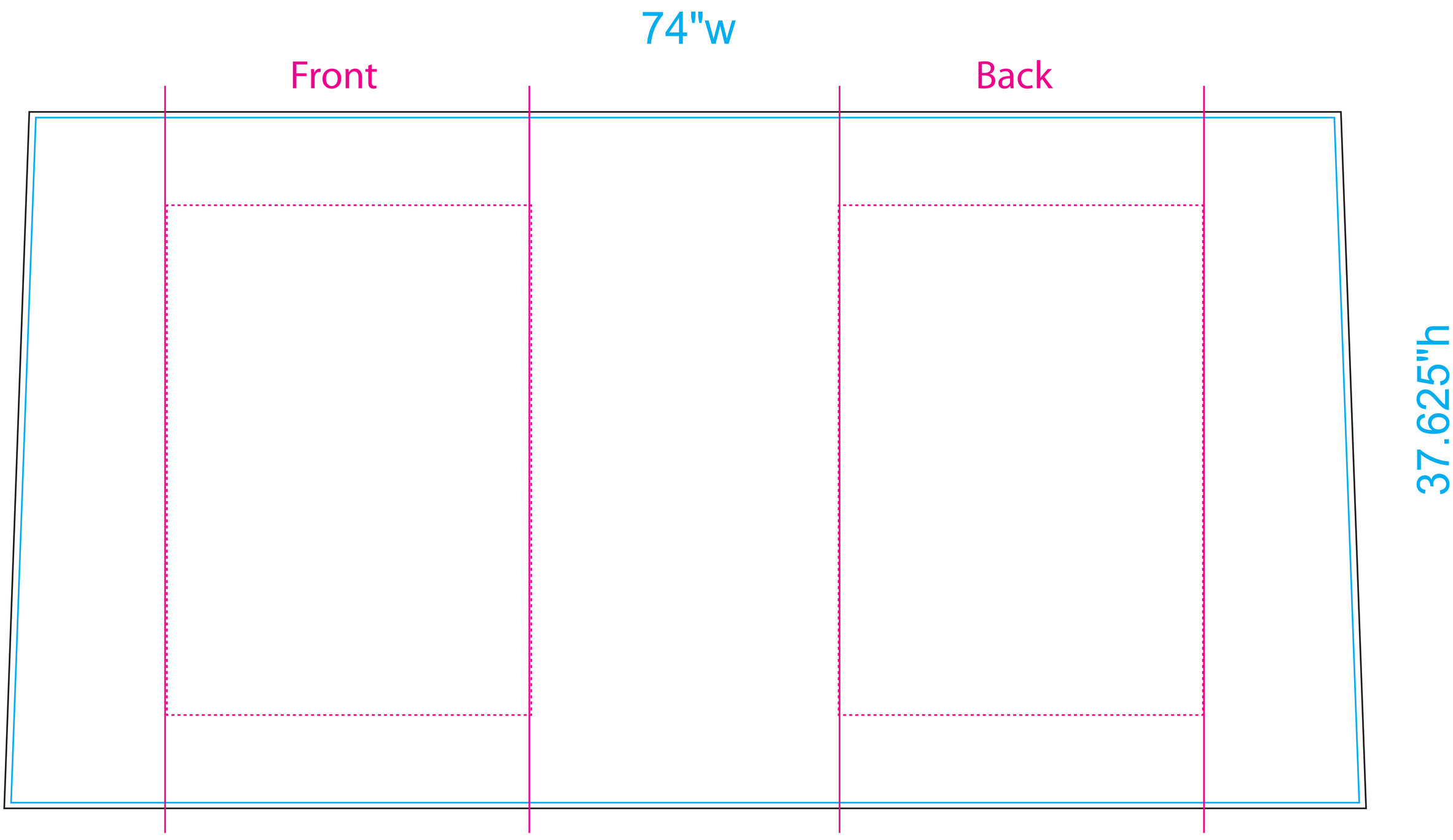

Print Size: 74.75”w x 38.25”h
Final Size: 74”w x 37.625”h
Live Area: 20”w x 28”h (on front and back)

Draped VBurst DSI Case Cover
Logo on Front ONLY

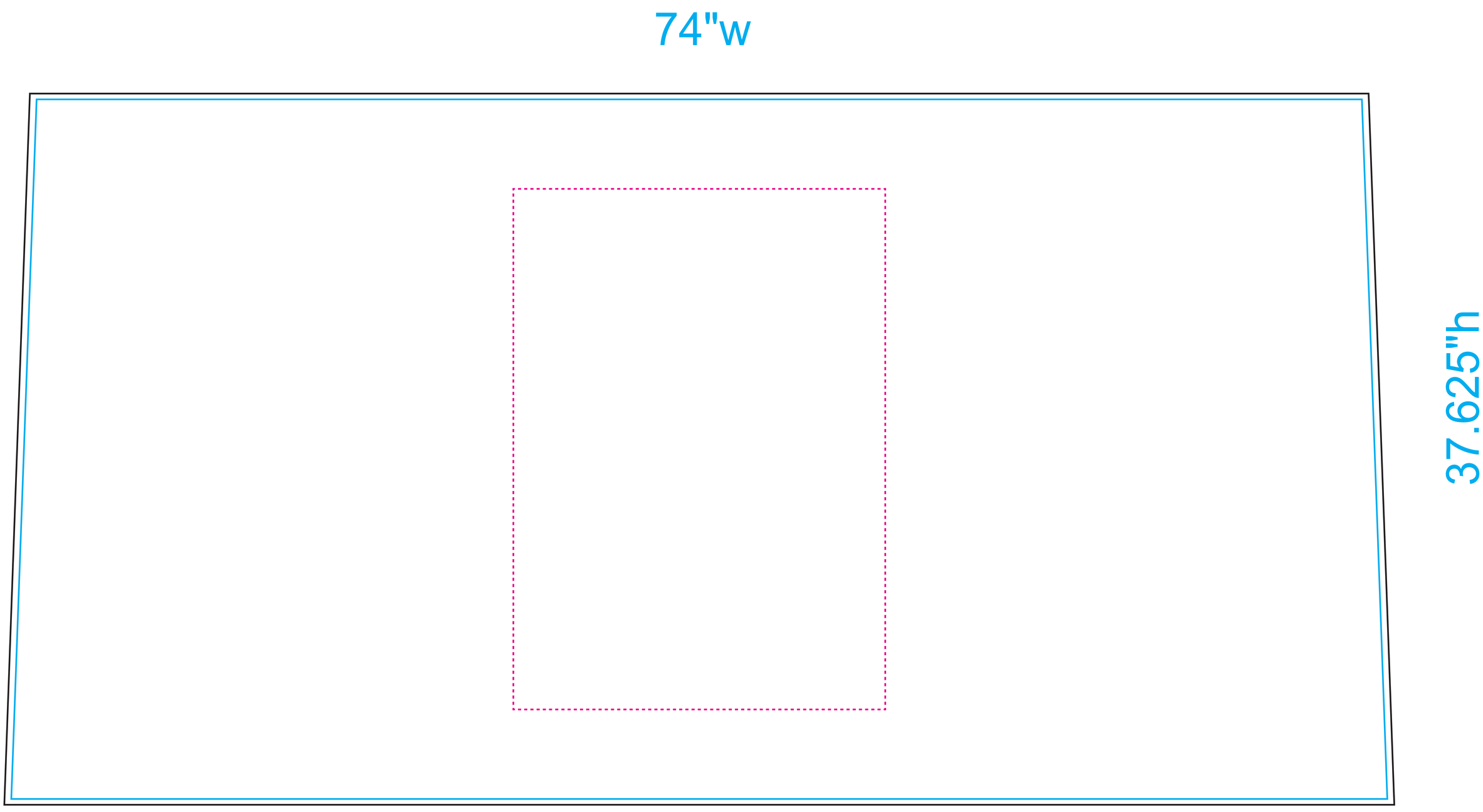

Print Size: 74.75”w x 38.25”h
Final Size: 74”w x 37.625”h
Live Area: 20”w x 28”h (centered)