Formulate Designer Series 30’ Backwall - Kit 02

FMLT-DS-30-02
Formulate® Designer Series 30ft displays have unique stylistic features and shapes, are portable and easy to assemble. The aluminum tube frame features snap-buttons and/ or spigot connections and zipper pillowcase fabric graphics. All displays come in portable, wheeled transit cases. Simply pull the pillowcase fabric graphic(s) over the frame and zip.

features and benefits:

- Premium aluminum tube frames with snap button/ spigot assembly
- Straight shaped frames
- Easy to store and ship
- Quick to set up
- Weighted feet for added stability
- Three zipper pillowcase fabric graphics
- Lifetime limited hardware warranty against manufacturer defects

dimensions:

Hardware	Graphic
Assembled unit: 358.35”w x 92.41”h x17.72”d 9102mm(w) x 2347mm(h) x 450mm(d) Approximate weight with cases: 125 lbs / 56.7 kgs	Refer to related graphic template for more information. Visit: www.exhibitors-handbook.com/graphic-templates
Shipping	
Packing case(s): 2 OCE Shipping dimensions: OCE: Expandable case length (l) may vary 40” - 66”l x 18”h x 18”d 1016mm-1677mm(l) x 458mm(h) x 458mm(d) Approximate total shipping weight (includes cases & graphics): 156 lbs / 70.8 kgs	

additional information:

Graphic material:
dye-sublimation zipper pillowcase fabric

We are continually improving and modifying our product range and reserve the right to vary the specifications without prior notice. All dimensions and weights quoted are approximate and we accept no responsibility for variance. E&OE. See Graphic Templates for graphic bleed specifications.

affordable exhibit displays inc

Included In Your Kit

Tools, Components, & Connectors

HEX KEY SET x1

TC-30-T x8

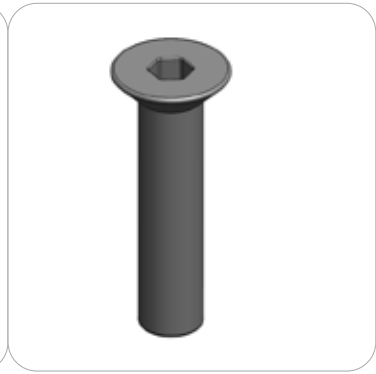

LN114-SCRW x6

TC-30-90T x2

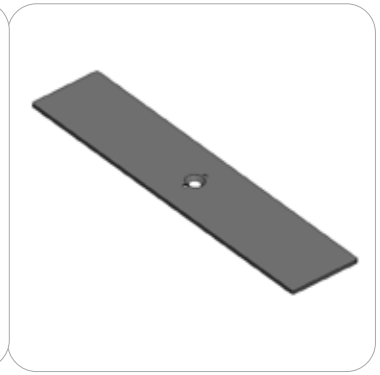

PLT-BP-LN114-S2-450 x2

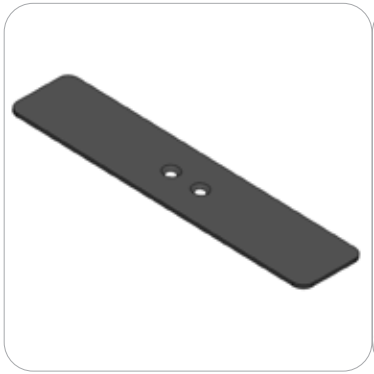

PLT-BP-LN114-S3-450 x2

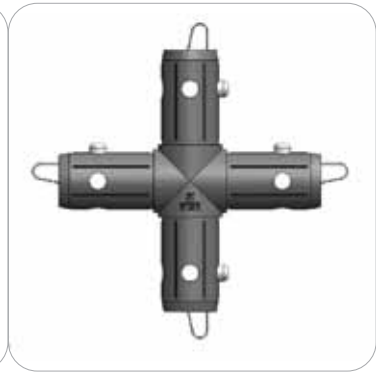

TC-30-X x3

TC-30-S x16

TC-30-90B x2

TCP-3030-R x2

Included In Your Kit

Graphics

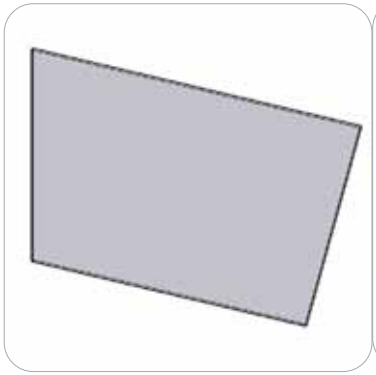

FMLT-DS-30-02-A-G x1

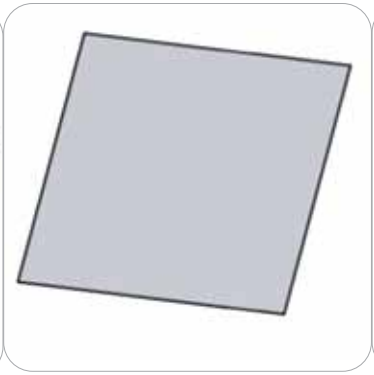

FMLT-DS-30-02-B-G x1

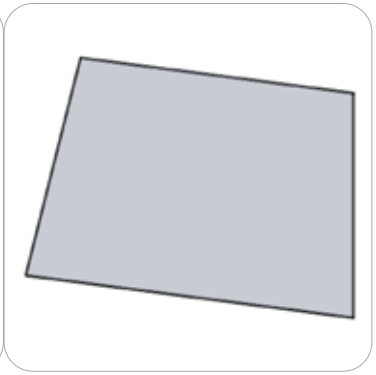

FMLT-DS-30-02-C-G x1

Tubes

DS-30-02-A-T1 x8

DS-30-02-A-T2 x8

DS-30-02-A-T3 x2

DS-30-02-A-T4 x2

DS-30-02-A-T5 x2

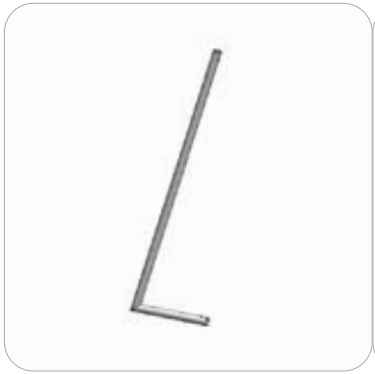

DS-30-02-A-T6 x2

DS-30-02-B-T1 x1

DS-30-02-B-T2 x2

DS-30-02-B-T3 x1

DS-30-02-B-T4 x2

Included In Your Kit

Tubes

DS-30-02-B-T5 x1

DS-30-02-B-T6 x1

DS-30-02-B-T7 x2

DS-30-02-B-T8 x2

Exploded View

FMLT-DS-30-02

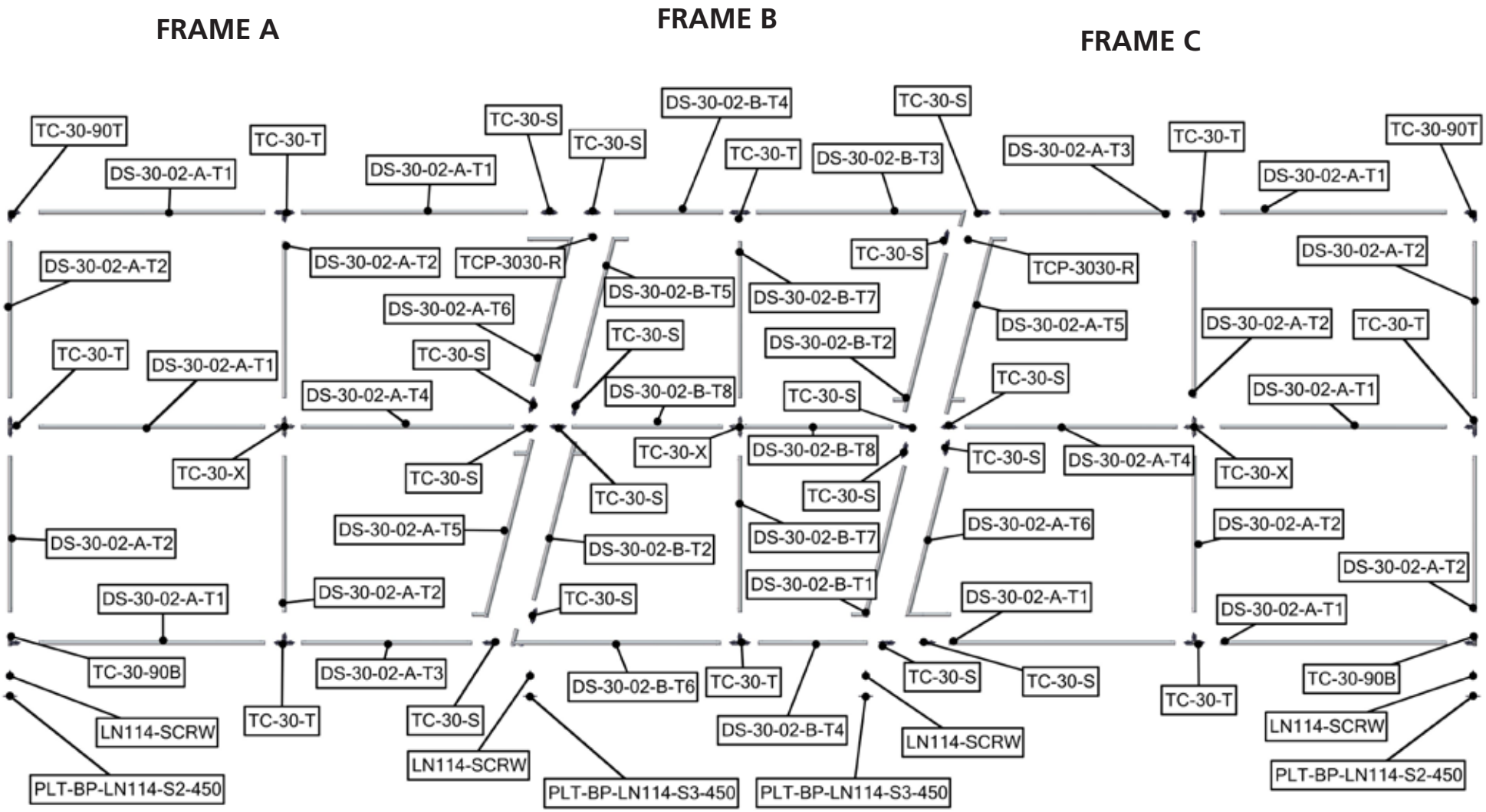

Labeling Diagram

FMLT-DS-30-02

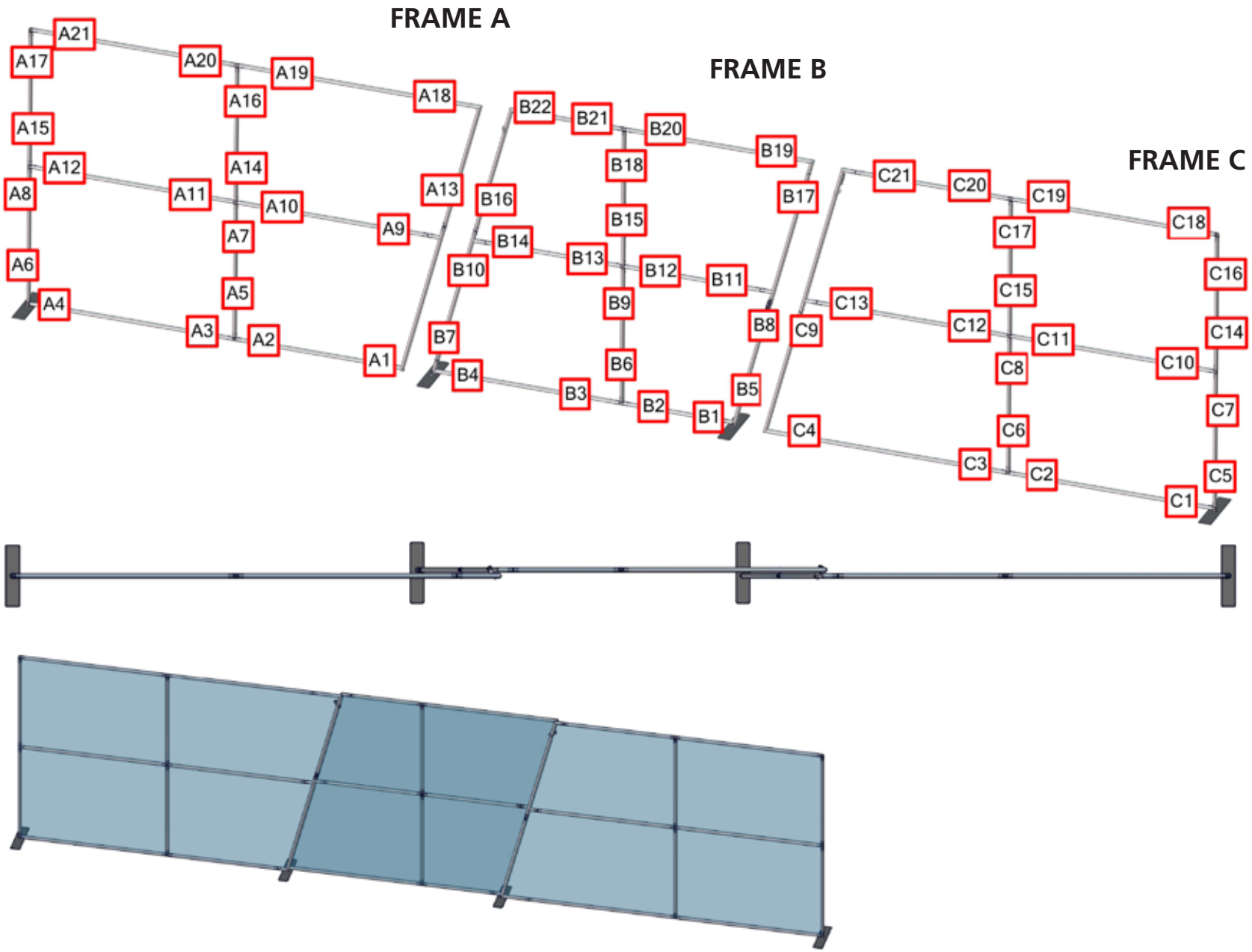

Connection Methods

Connection Method 1:
ES30 / ES50 / ES75

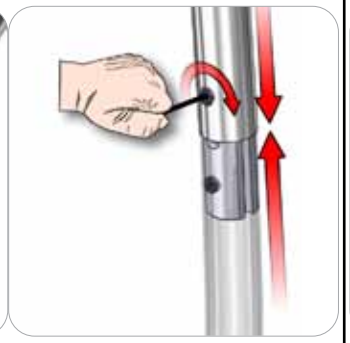

Compress the unlocked connector and slide one tube onto each end. Lock both screws carefully using your hex key tool. Be sure to lock securely, but do not overtighten.

Connection Method 2:
Snap Buttons & Swage

Locate the snap button on the connector or swage tube. Locate the hole on the corresponding tube. Press the snap button with your thumb and slide the tube and connector together so that the snap button snaps fully into the lock hole. To disassemble, press the snap button and pull apart.

Connection Method 3:
ES30-90B / ES30-I / ES30-C

Compress one unlocked end of the connector and slide it through one tube end. Compress the other end of the connector and slide the second tube on. Lock both screws carefully using your hex key tool. Be sure to lock securely, but do not overtighten.

Connection Method 4:
Tube Clamps

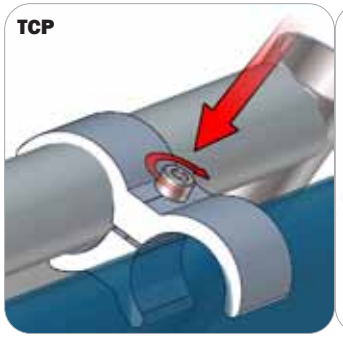

Be sure to fully assemble all frames before using clamps. With the clamp unlocked, place one tube of the first frame into the mouth of the clamp. Place the second tube (if applicable) into the second mouth of the clamp. With both frame's tubes in the clamp, be sure to lock securely, but do not overtighten.

Kit Assembly

Step by Step

Step 1.

Assemble Frame A. The corresponding tubes connect with the snap button connectors.

Please reference Connection Method 2 for more details.

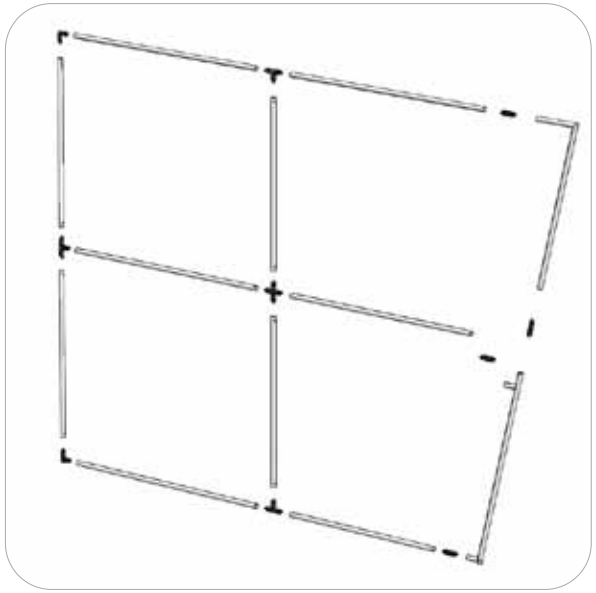

Step 2.

Apply FMLT-DS-30-02-A-G graphic onto Frame A. Zip up the pillowcase at the bottom and side of the frame.

Zipper located on the left side and bottom of Graphic A.

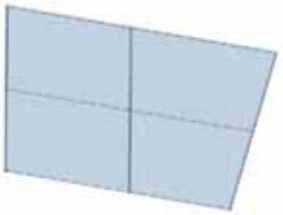

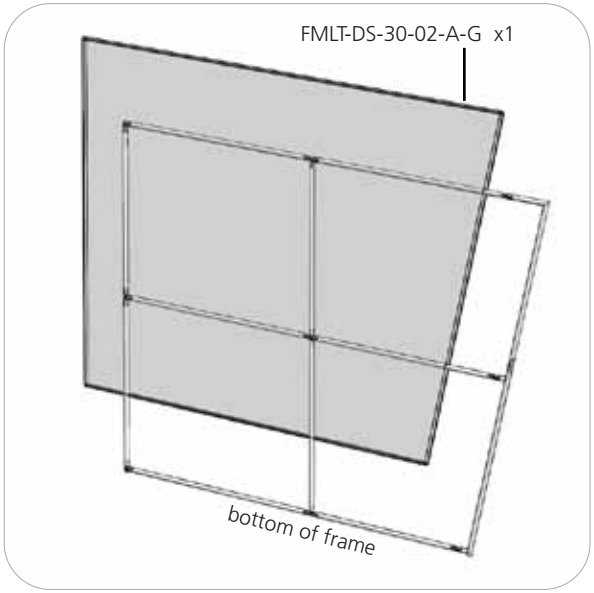

Step 3.

Assemble Frame B. The corresponding tubes connect with the snap button connectors.

Please reference Connection Method 2 for more details.

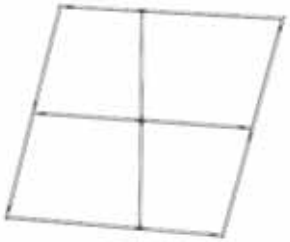

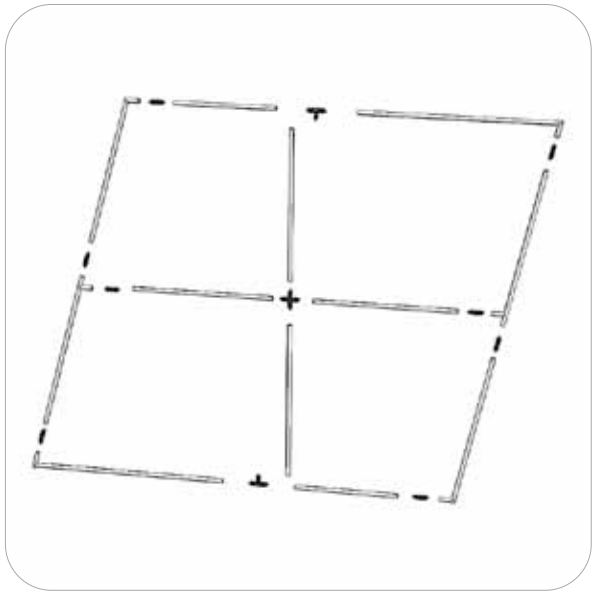

Step 4.

Apply FMLT-DS-30-02-B-G graphic onto Frame B. Zip up the pillowcase at the bottom and side of the frame.

Zipper located on the right side and bottom of Graphic B.

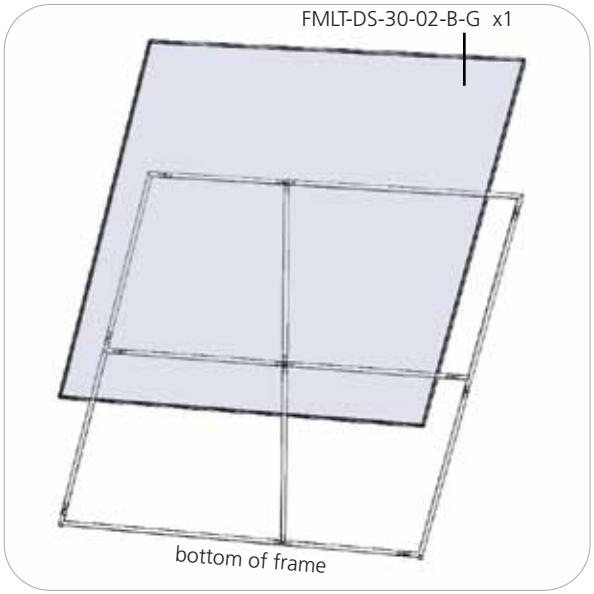

Kit Assembly

Step by Step

Step 5.

Assemble Frame C. The corresponding tubes connect with the snap button connectors.

Please reference Connection Method 2 for more details.

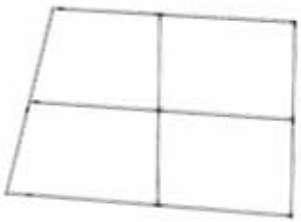

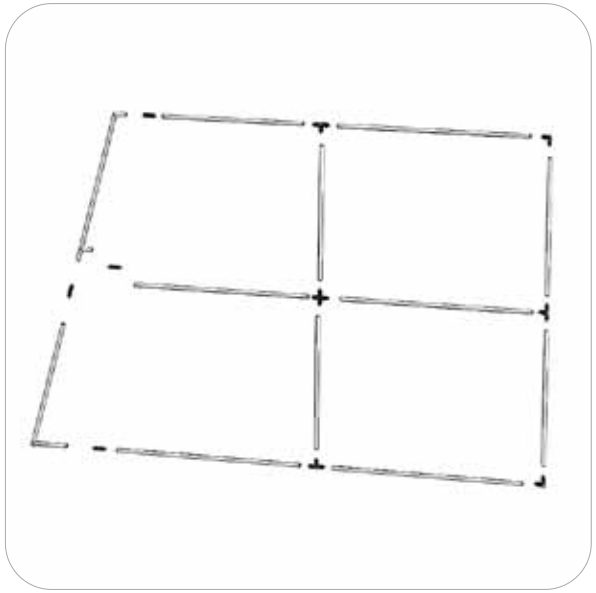

Step 6.

Apply the FMLT-DS-30-02-C-G graphic onto Frame C. Zip up the pillowcase at the bottom of the frame.

Zipper located to the bottom of the Graphic C

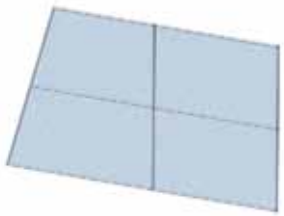

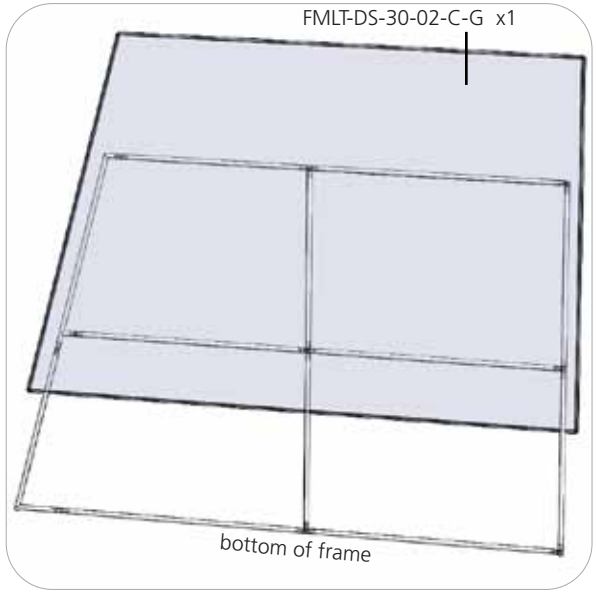

Step 7.

Using the provided handtool, attach a PLT-BP-LN114-S2-450 to the left side of Frame A and one base to the right side of Frame C.

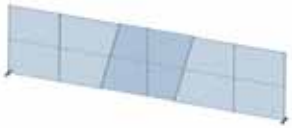

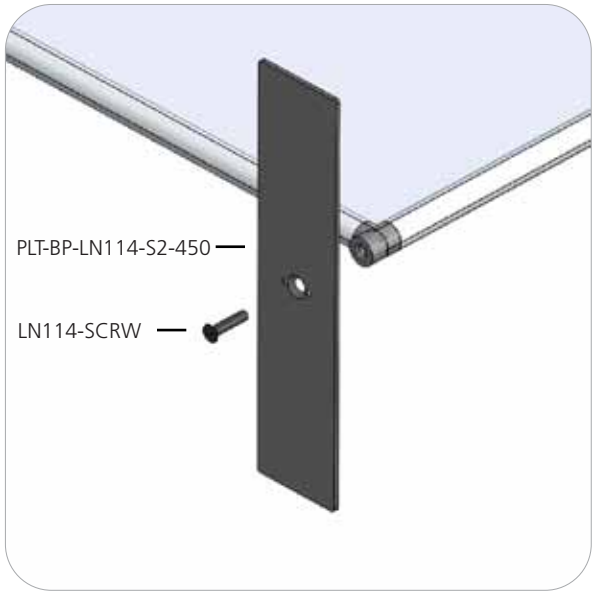

Step 8.

Attach a PLT-BP-LN114-S3-450 to the left and right sides of Frame B. Then, attach the right side of Frame A onto the left base of Frame B.
Finally, attach the left side of Frame C onto the right base of Frame B.

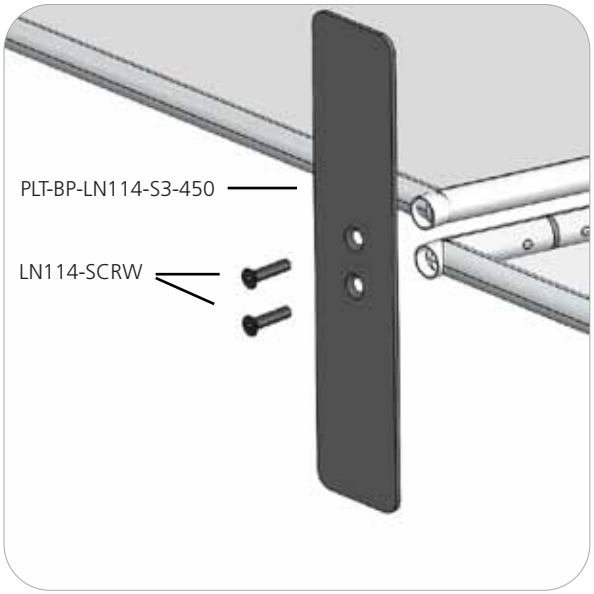

Kit Assembly

Step by Step

Step 9.

Using the handtool provided, use the two TCH-30-B2B tube clamp connectors to brace Frame A clamps to Frame B.

Please reference Connection Methods 4 for more details

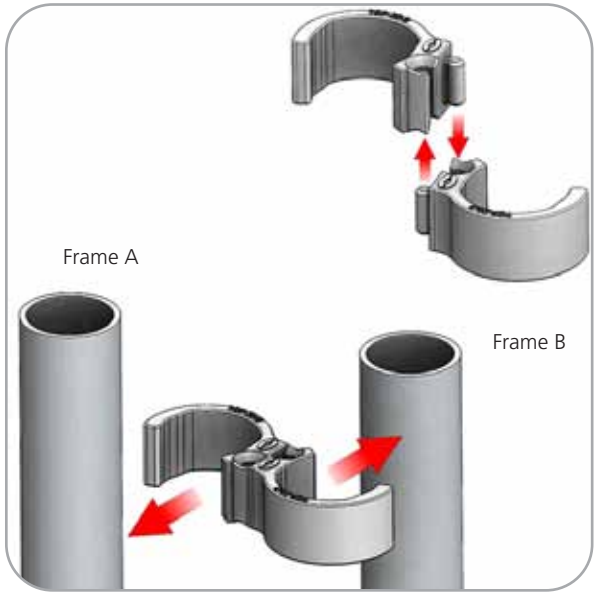

Step 10.

Using the handtool provided and use the two TCH-30-B2B tube clamp connectors to brace Frame B clamps to Frame C.

Please reference Connection Methods 4 for more details

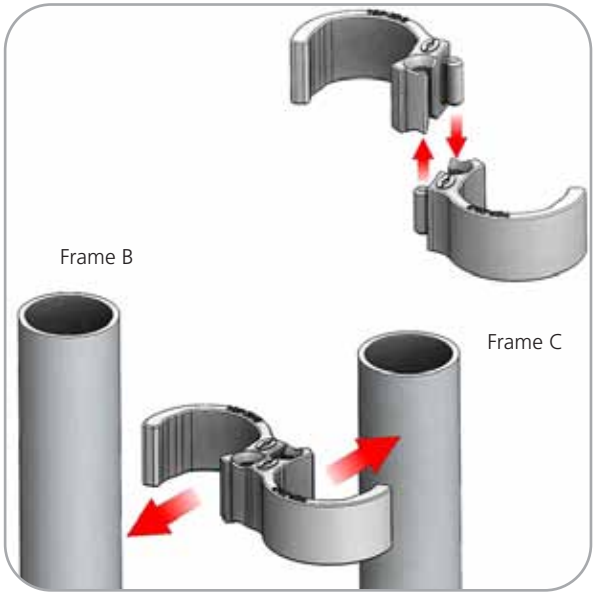

Your FIRST AND ONLY choice for trade show displays since 1994.

POP UP DISPLAYS

BANNER STANDS

TRADE SHOW DISPLAYS

AffordableDisplays.com

affordable exhibit displays inc

Partnering together to perfectly present your image.